CacheFlow™ 1000

Installation Guide

CacheFlow Inc.
650 Almanor Avenue
Sunnyvale, California 94086
(408) 220-2200 Voice
(408) 220-2250 FAX
(888) 702-3569 Technical Support
info@cacheflow.com
www.cacheflow.com

Information contained in this document is believed to be accurate and reliable. However, CacheFlow Inc. assumes no responsibility for its use nor for any infringements of patents or other rights of third parties which may result from its use. CacheFlow Inc. reserves the right to change product specifications at any time without notice.

NOTE: This equipment has been tested and found to comply with the limits for a Class A digital device pursuant to Part 15 of the FCC Rules. These limits are designed to provide reasonable protection against harmful interference when the equipment is operated in a commercial environment. This equipment generates, uses and can radiate radio frequency energy and, if not installed and used in accordance with the instruction manual, may cause harmful interference to radio communications. Operation of this equipment in a residential area is likely to cause harmful interference in which case the user will be required to correct the interference at his own expense.

CAUTION: The CacheFlow 1000 contains a lithium battery. The battery can explode if incorrectly replaced. Replace only with the same or equivalent type recommended by the manufacturer. Discard used batteries according to local regulations.

ATTENTION: IL Y A DANGER D'EXPLOSION S'IL Y A REMPLACEMENT INCORRECT DE LA BATTERIE. REMPLACER UNIQUEMENT AVEC UNE BATTERIE DU MÉME TYPE OU D'UN TYPE RECOMMANDÉ PAR LE CONSTRUCTEUR. METTRE AU RÉBUT LES BATTERIES USAGÉES CONFORMÉMENT AUX INSTRUCTIONS DU FABRICANT.

CacheFlow is a trademark of CacheFlow Inc. All other product names and services identified in this documentation are trademarks or registered trademarks of their respective companies and are used throughout this documentation in editorial fashion only for the benefit of such companies. No such use, or the use of any trade name, is intended to convey an endorsement or other affiliation with CacheFlow Inc.

Copyright 1997 – 2000 CacheFlow Inc. All rights reserved worldwide. No part of this document may be reproduced by any means nor translated to any electronic medium without the written consent of CacheFlow Inc.

Printed in USA
231-00110-02
rev E
12/99

Contents

Chapter 1
Introduction 1

Getting Started 1
CacheFlow 1000 Features 1
The CacheOS™ 2
Transparent Caching 3
The Hardware Design 3
Serial Console 5
Command Line Interface 5
Web interface 5
Clients 5
Installation Overview 5

Chapter 2
Setting up the CacheFlow 1000 7

Overview 7
Unpacking the CacheFlow 1000 7
Step 1: Install the CacheFlow 1000 in an Equipment Rack 8
Safety Instructions 8
Locking the System Tray 9
Placing the CacheFlow 1000 on a Shelf 10
Installing the Rack Mounting Adapters 10
Step 2: Connect to the Network 11
Step 3: Connect a Terminal 12
Testing Your Serial Port Configuration 13
Step 5: Install Disk Drives 14
Step 4: Connect Power 14
Step 5: Power on the CacheFlow 1000 15
Step 6: Configure the Network Settings 15
Accessing the Setup Console 16
Sample Setup Console Session 17

Step 7: Complete the Configuration 19
Using the Command Line Interface 19
Using the Web interface 22
Where to Go From Here 28

Chapter 3
Troubleshooting 29

Overview 29
Installation Issues 30
CacheFlow 1000 Does Not Power On 30
Power Supply LED is Off 31
Link LED is Off 32
Speed LED is On 32
Disk Status LED is OFF 32
Disk Status LED is Flashing 33
Cannot Access the Serial Console 34
Testing the CacheFlow 1000 34
The Command Line Interface 34
Command Line Interface Session Times Out 34
Command Line Interface Limited to Four Sessions 34
The Web interface 34
Web interface is Not Accessible 35
Web interface Username and Password Fail 35
Web interface Applets Not Displayed 35
Web interface Java Errors Occur 35
User Issues 36
Client HTML Requests Fail 36
Client HTML Responses are Slow 37

Appendix A
Specifications 39

CacheFlow 1000 Electrical and Environment Specifications 39

Index

Chapter 1

Introduction

This chapter describes the CacheFlow® 1000 product features.

Getting Started

The CacheFlow® 1000 is easy to install and use. Follow the procedures in "Setting up the CacheFlow 1000" on page 7 to guarantee a safe and quick installation. If you experience problems while installing or configuring the CacheFlow 1000, check the CacheFlow Web site for the latest support bulletins and technical notes:

http://www.cacheflow.com

CacheFlow 1000 Features

The CacheFlow 1000 provides the ultimate in Web caching performance. The CacheFlow 1000 is a single-purpose Web cache, based on the patent-pending CacheOS™ operating system.

Figure 1-1
The CacheFlow 1000

The CacheFlow 1000 is a single-purpose Web caching device designed specifically for caching Web objects.

The CacheOS™

The CacheOS is a new generation of Web caching technology invented by CacheFlow Inc. It combines features like Active Caching, Object Prefetch, and DNS Caching with an ultra-efficient storage system.

Active Caching

Active Caching describes how the CacheOS stores and refreshes objects in the cache. When a Web page is requested by a client, the CacheOS tracks a variety of information for every object on the page, including the frequency of requests, frequency of object modifications, and time to retrieve the object. The CacheOS then uses this information to determine the refresh pattern for the object.

Rather than waiting to refresh objects as clients request them, forcing the clients to wait while the objects are verified, the CacheOS constantly analyzes the cache and refreshes objects according to each object's refresh pattern. This drastically reduces the amount of time required to deliver objects to the clients.

Object Prefetching

Each Web page can be composed of dozens of objects, such as images, sounds, Java applets, etc. Under normal browser operations, the client requests a Web page, and the HTML document is retrieved and delivered to the client. As the client reads the HTML document, it begins requesting the rest of the objects that make up the page.

CacheFlow speeds this process. When the CacheOS retrieves the HTML document, it reads the document and begins prefetching the objects that make up the page. The CacheOS can parse the document and request the objects much faster than the client can request them. By the time the client begins requesting objects on the page, the CacheOS has already started loading them in the cache. Object prefetching delivers complete pages to the client faster, even when the page has to be retrieved from the server.

DNS Caching

The CacheOS also maintains a large DNS cache using similar active caching techniques. The shared DNS cache boosts overall Web cache performance.

Transparent Caching

The CacheOS supports transparent caching. Transparency allows you to deploy the CacheFlow 1000 without requiring users to configure their browsers. This simplifies the installation, and ensures users actually use the cache. The CacheFlow 1000 is configured for transparency by default. All you have to do to install the CacheFlow 1000 is connect the device to your network and configure your routers or load-balancing switches to forward all packets addressed to port 80 to the CacheFlow 1000.

The Hardware Design

The CacheFlow 1000 is designed for easy maintenance and expansion. The CacheFlow 1000 includes the following features:

- From 1 to 6 hot-swap disk drives
- 1 or 2 hot-swap power supplies
- From 128 to 512 MB of RAM
- 1 to 4 network adapters

Hot-Swap Disk Drives

The CacheFlow 1000 disk drives are Ultra Fast Wide SCSI-3 drives. They can be hot-swapped for replacement or expansion.

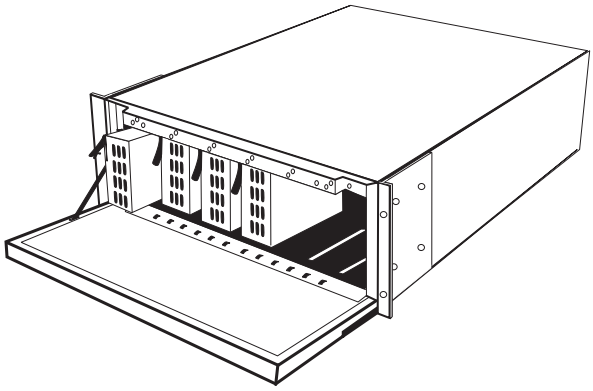

Figure 1-2
Hot-Swap Drives

The disk drives can be easily removed and replaced without powering off the CacheFlow 1000.

Multiple Network Adapters

The CacheFlow 1000 includes a built-in Ethernet adapter, and can be upgraded with up to three additional PCI Ethernet adapters. Multiple adapters can be used to support a higher number of concurrent clients than would be supported on a single Ethernet connection.

Serial Console

When you connect a device to a TCP/IP network, the device must be assigned an IP address. The CacheFlow 1000 provides a Serial Console to enter the network configuration for the first time. The Serial Console is simple to use, and can be accessed from any serial (RS232) terminal connection.

Command Line Interface

The command line interface allows you to manage and configure the CacheFlow 1000 using a Telnet connection or the Serial Console.

Web interface

The Web interface is a powerful, Java-based application that allows you to manage the CacheFlow 1000 from any location, using a standard Web browser. The Web interface provides an easy way to configure, monitor, and upgrade the CacheOS.

Clients

With transparent caching, all requests sent to port 80 of a server will be handled by the CacheFlow 1000. And all Web clients are supported.

If you do not use transparent caching, any Web client that supports HTTP and FTP proxies can use the CacheFlow 1000. When the client defines the CacheFlow 1000 as the HTTP or FTP proxy server, all requests are handled by the CacheOS. You can manage multiple clients using a PAC (proxy auto-configuration) file.

Installation Overview

To install and begin using the CacheFlow 1000 you must complete the following steps:

1. Setup the CacheFlow 1000: page 7. You must install the CacheFlow 1000 in an equipment rack, and connect the cabling.

2. Configure the network settings: page 15. Before you can use the CacheFlow 1000 you must configure the network settings using the Serial Console.
3. Review the configuration with the Web interface: page 19. Once the CacheFlow 1000's network settings are configured, you can connect to it using the Web interface. See the Web interface online help for a description of the various configuration options.
4. Configure your network to use transparent caching or configure clients: the *CacheOS Management and Configuration Guide*. Once the CacheFlow 1000 is operational you can configure your routers or load-balancing switches to forward requests transparently to the device, or you can configure clients to begin using the cache.

Chapter 2

Setting up the CacheFlow 1000

This chapter describes how to install and configure the CacheFlow 1000 in your environment.

Overview

To successfully install the CacheFlow 1000 you must complete the following steps:

Procedure	Page
1. Install the CacheFlow 1000 in an equipment rack	8
2. Connect the network	11
3. Connect a terminal	12
4. Connect power	14
5. Power on the CacheFlow 1000	15
6. Configure the network settings using the Serial Console	15
7. Complete the configuration	19

Unpacking the CacheFlow 1000

The CacheFlow 1000 is shipped fully assembled, with the exception of the Rack Mounting Adapters and the disk drives. When unpacking the CacheFlow 1000, verify the following items are included:

Item	Quantity
CacheFlow 1000 Base System	1
Disk Drives	varies
Rack Mounting Adapters	2
Rack Mounting Screws	8
AC Power Cord	1
Null Modem Cable	1
Serial Loop-back Connector	1
System Tray Key	1
CacheFlow 1000 Installation Guide	1
CacheOS Configuration Guide	1

If any of the items are missing, contact your CacheFlow Customer Service representative.

Step 1: Install the CacheFlow 1000 in an Equipment Rack

The CacheFlow 1000 weighs between 59 and 78 pounds when fully configured. If installed in an equipment rack it must be set on an equipment shelf, and securely fastened to the equipment rack. Follow the instructions carefully to ensure proper and safe operation.

Safety Instructions

1. Follow all warnings and instructions marked on the product and included in this manual.
2. The system tray should remain locked at all times, except when upgrading or replacing components. Before moving or installing the CacheFlow 1000, verify the system tray lock is in the locked position. See "Locking the System Tray" on page 9 for additional information.
3. When installing the CacheFlow 1000 in an equipment rack, it must be sitting on a shelf sit5.7(d)-5.3(s(ecut5.7(rely187.8(lf)8.4(a)-1.2(stsit5.7e(d)-5.3(tod)

4. When installing the CacheFlow 1000 in an equipment rack, be sure to allow sufficient space to provide adequate air circulation. There should be a minimum of three inches clearance both in front of and behind the CacheFlow 1000.
5. When installing the CacheFlow 1000 in an equipment rack, the rack must be rated to support all mounted equipment.
6. The CacheFlow 1000 contains lithium batteries. Lithium batteries can explode if incorrectly replaced. Replace only with the same or equivalent type recommended by CacheFlow. Discard used batteries according to local regulations.

Locking the System Tray

The CacheFlow 1000 is designed with a system tray to make it easy to upgrade and replace system components. The system tray slides out from the back of the CacheFlow 1000, and it is secured with a key lock as shown in Figure 2-1 below:

Figure 2-1
System Tray Lock

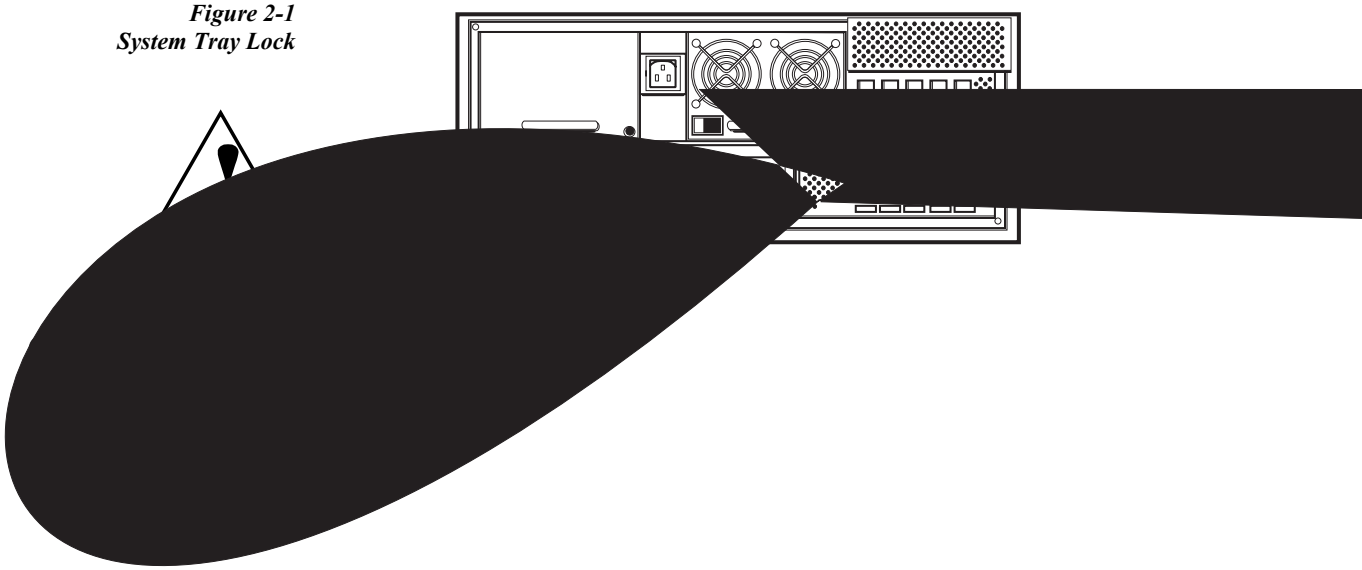

Placing the CacheFlow 1000 on a Shelf

The CacheFlow 1000 must be installed on a shelf or L-brackets in the equipment rack. The rack mounting adapters are not designed to support the CacheFlow 1000 on their own. If you install the CacheFlow 1000 in an equipment rack without a shelf, the rack mounting bolts may fail when the system tray is opened.

1. Verify the system tray lock is in the locked position.
2. Set the CacheFlow 1000 on a shelf or L-brackets mounted to the equipment rack. The shelf and rack must be rated to support all of the equipment installed.

Figure 2-2
Rack Mounting Bolts

Warning

The CacheFlow 1000 must be installed on a shelf or L-brackets. The rack mounting adapters are not designed to support the CacheFlow 1000 on their own, and the rack mounting bolts may fail if a shelf is not used.

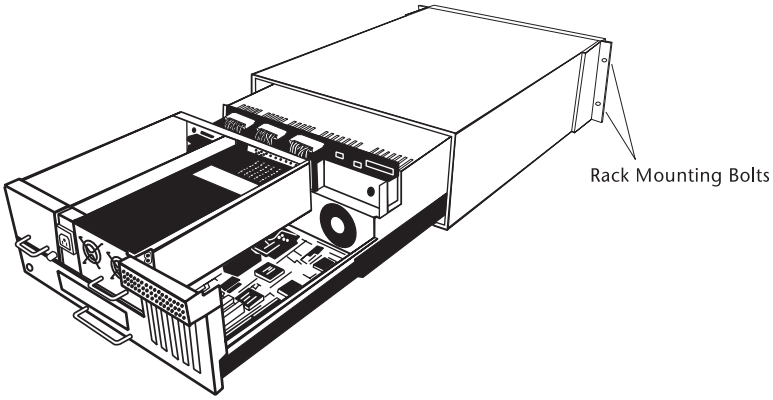

Installing the Rack Mounting Adapters

To install the rack mounting adapters, follow the steps outlined below:

1. Determine where the rack mounting adapters should be installed. One adapter is installed on each side of the CacheFlow 1000 housing. The adapters can be installed in the front mounting holes, or rear mounting holes, as illustrated in Figure 2-3:

Figure 2-3
Rack Mounting Holes

You can install the rack mounting adapters in the front or rear rack mounting holes.

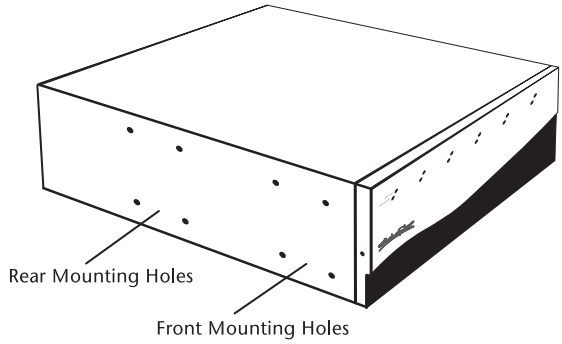

2. Attach one mounting adapter to each side of the CacheFlow 1000 housing using the mounting screws provided. Be sure to use all four screws for each adapter.
3. Slide the CacheFlow 1000 into place and attach the mounting adapters to the equipment rack.

Step 2: Connect to the Network

To connect the CacheFlow 1000 to the network, connect an RJ45 Cat 5 Ethernet cable to the built-in adapter as shown in figure 2-4:

Figure 2-4
Ethernet Connection

Connect the CacheFlow 1000 to the network using the built-in adapter.

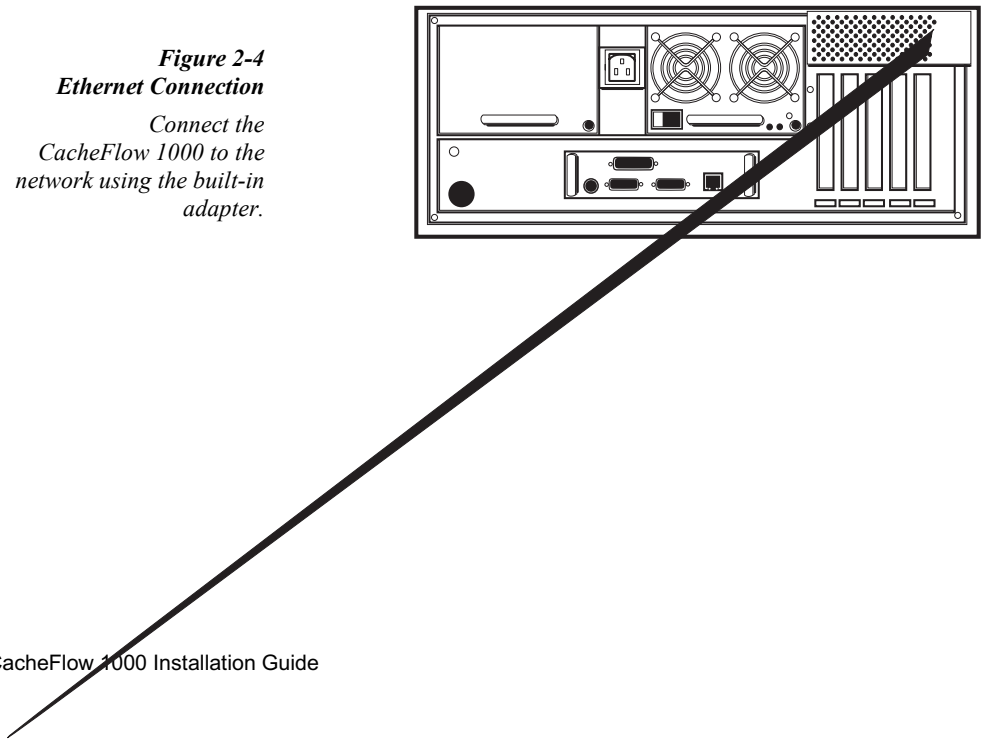

Testing Your Serial Port Configuration

If the loop-back test fails, you must resolve your serial port configuration problems before attempting to connect to the CacheFlow 1000.

Before connecting the terminal to the CacheFlow 1000, use the loop-back connector to verify the serial port configuration of your terminal.

Connect the loop-back connector to one end of the null modem cable, and connect the other end of the cable to your computer's serial port. Establish a connection with your terminal emulator. Type in the terminal emulator and verify keystrokes are echoed on the screen. If your typing is echoed on the screen, the terminal emulator is configured for the correct serial port, and the serial port is functioning (this does not verify the terminal emulator is configured for the correct baud rate, etc. as described above). If you cannot type in the terminal window, or keystrokes are not echoed on the screen, there is something wrong with your configuration and you will not be able to connect to the CacheFlow 1000 until the problem is resolved.

To resolve problems if the loop-back test fails, verify the following:

- Verify the COM port selected in the terminal emulator matches the COM port where the null modem cable is connected. If you are not sure which COM port is connected, try the other COM ports in the terminal emulator and see if the loop-back test succeeds.
- Verify the COM port interrupt and base I/O address is correct and does not conflict with other devices.

Once the configuration is verified using the loop-back connector, remove the loop-back connector and connect the null modem cable to the CacheFlow 1000 serial port.

Step 5: Install Disk Drives

The disk drives are shipped separate from the CacheFlow 1000 system unit. Before connecting power to the CacheFlow 1000, install the disk drives as described below:

1. Open the front access door on the CacheFlow 1000.

Figure 2-6
Installing Disk Drives

Insert the disks in the first available drive bay, starting from the left.

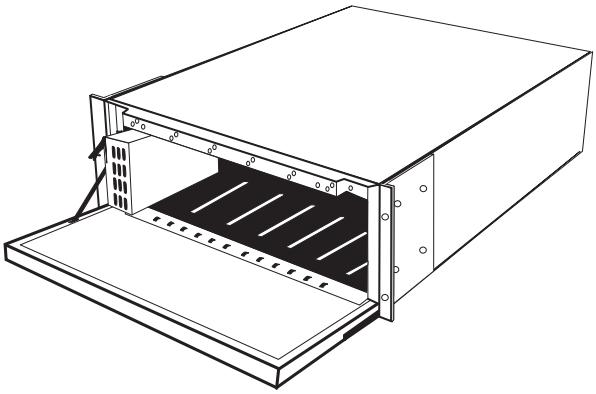

2. Take a disk from the shipping container (the disks are in no particular order). Orient the disk drive for the first available drive bay (the disk lever, the black latch, must be on top, close to the LEDs for the drive bay). The drive bays are numbered from 1 to 6, starting from the left.
3. While holding the disk lever up, align the disk drive with the plastic guide rails for the bay, and push it in.
4. When the disk lever meets the CacheFlow 1000 frame, push the lever down slowly until the lever locks in place.
5. Repeat steps 2-4 for all the disk drives in the shipping container.

Step 4: Connect Power

Before connecting power to the CacheFlow 1000, verify the On/Off switch is in the Off position. Plug the socket end of the power cord into the power connector at the back of the CacheFlow 1000, as shown in Figure 2-6.

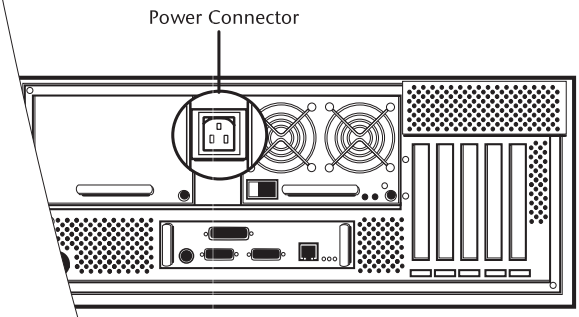

l of the power cord into a grounded power outlet.

1000

eFlow 1000, push the power switch to the on
ure 2-7.

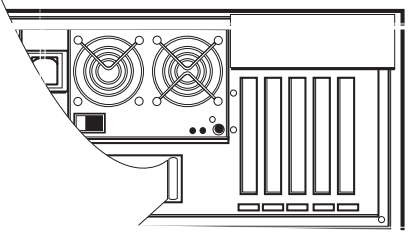

Step 6: Configure the Network Settings

Once the CacheFlow 1000 is properly installed and running you can configure the network settings for the built-in network adapter. The network settings must be configured before you can begin using the CacheFlow 1000.

Configure the network settings for the first time using the Setup Console. The Setup Console includes just the settings required for the CacheFlow 1000 to begin functioning on your network:

If the CacheFlow 1000 has two power supplies, turn on power for the second power supply. You can turn on the power supplies in any order.

- IP Address
- Subnet Mask
- Default Gateway Address
- DNS (Domain Name Service) Server Address
- CacheOS Username and Password
- CacheOS Access Restrictions

Accessing the Setup Console

To access the Setup Console you must first connect a terminal to the CacheFlow 1000 serial port as described in "Step 3" on page 12.

When you turn on the CacheFlow 1000 there will be a delay while it performs a system check. It may take from one to three minutes for the CacheFlow 1000 to start, depending on the amount of memory and the number of disks installed. As the device boots, informational messages are written to the screen. When the boot sequence is complete, a prompt is displayed.

Press the <Enter> key three times to access the Serial Console. If the Serial Console is not displayed, verify the terminal configuration. See page 12 for additional information.

When prompted, press the <Enter> key on the terminal three times to access the Serial Console. You can start the Setup Console from the Serial Console. When you start the Setup Console, read each message displayed and enter the required information. Each setting is described below:

- IP Address: The IP address you enter must be a valid IP address for your network. This is the address you will use to access the CacheFlow 1000 Web interface.
- Subnet Mask: The subnet mask you enter must be valid for your network subnet class. The default subnet mask is 255.255.255.0.
- Default Gateway Address: The default gateway address is the IP address of the gateway on your network used for routing.
- DNS (Domain Name Service) Server Address: The DNS address is the IP address of a server used to resolve host names to IP addresses. You can enter additional DNS servers using the CacheFlow 1000 Web interface after you have finished entering the network settings.
- CacheOS Username and Password: The CacheOS username and password can be used to restrict access to the CacheFlow 1000. When the CacheFlow 1000 is configured and running, the Web interface and command line interface will be available on your network. You should set a username and password to prevent

unauthorized access. If you forget your username and password, you can use the Setup Console to reset them.

- Enable Password: The enable password is used for the Enable mode of the command line interface. When you enter the **enable** command in the command line interface, the CacheOS prompts for the enable password.
- CacheOS Access Restrictions: Access restrictions allow you to limit access to the Web interface and command line interface to individual workstations or subnets. From the serial console you can limit access to an individual workstation only. You can define additional access restrictions using the Web interface or command line interface after you have completed the initial configuration.

Sample Setup Console Session

A sample Setup Console session is shown below:

You have entered the following IP addresses:

IP address: 192.168.10.18
IP subnet mask: 255.255.255.0
IP gateway: 192.168.10.72
DNS server: 192.168.10.64

Would you like to change any of them? Y/N [No] ***<Enter>***
---------- (page 2 of 4) ----------

Press <ESC> at any time to return to the main menu

DIRECTIONS:

> You can connect to the command line interface or
> Web interface to perform additional management tasks.
>
> WARNING - access to the CacheOS device is currently
> unrestricted and it may be configured by unauthorized
> persons.

Would you like to create a console user account now? Y/N [Yes] ***Y<Enter>***
Enter console username: ***admin<Enter>***
Enter console password: ******<Enter>***
Verify password: ******<Enter>***
Enter enable password: ******<Enter>***
Verify password: ******<Enter>***

---------- (page 3 of 4) ----------

Press <ESC> at any time to return to the main menu

DIRECTIONS:

> Access to the command line interface and Web interface
> can be restricted to specific workstations, identified
> by their IP address.
>
> This setup console allows you to add one IP address to the
> list of authorized workstations (additional workstations
> may be configured later from either the command line
> interface or Web interface).
>
> The CacheOS device can currently be accessed from
> any workstation.

Would you like to restrict access to an authorized workstation? Y/N [No] ***Y<Enter>***
Authorized workstation [0.0.0.0]: ***192.168.70.138<Enter>***

---------- (page 4 of 4) ----------

DIRECTIONS:

> The CacheOS device has been successfully configured
> to use IP address: “192.168.10.18”

```
      You can connect to the command line interface or
      Web interface to perform additional management tasks.
      To connect to the command line interface, open the
      following location from your Telnet application:
      192.168.10.18

      To connect to the Web interface, go to the following
       location with your Internet browser:

      http://192.168.10.18:8081/

      The console is password protected and may be
      accessed only from authorized workstations, such
      as 192.168.70.138

---------------- CONFIGURATION COMPLETE ------------------

Press "enter" three times to activate the serial console
```

At this point you can disconnect the terminal and use the Web interface to manage and configure the CacheFlow 1000.

Step 7: Complete the Configuration

Once the network settings are configured using the Serial Console, you can connect to the CacheFlow 1000 command line interface or Web interface to complete the configuration of the device. You can connect to the command line interface using Telnet or the Serial Console. You can connect to the Web interface using any Web browser.

Using the Command Line Interface

The command line interface is described in detail in the *CacheOS Management and Configuration Guide*. When first configuring the CacheFlow 1000 you should perform the following tasks:

- configure the adapters
- add DNS servers
- set the CacheFlow 1000 name
- verify the CacheOS time

To connect to the command line interface using the Serial Console, select Command Line Interface from the Serial Console menu:

```
Welcome to the CacheOS Serial Console
          Version: 2.0.03 Release id: 11571

------------------------- MENU -----------------------------
1) Command Line Interface
2) Setup Console
------------------------------------------------------------

Enter option:
```

To connect to the command line interface using Telnet, open a connection to the IP address of the Web cache (the Web cache listens for connections on the default Telnet port of 23):

```
telnet> open 192.168.10.18<Enter>
username: admin<Enter>
password: ******<Enter>
CacheOS >
```

Once you have connected to the command line interface, enter the **enable** command then enter the **config** command:

```
CacheOS > enable<Enter>
Password: *****<Enter>
CacheOS # configure<Enter>
Configuring from terminal or network [terminal]? terminal<Enter>
CacheOS #(config)
```

When you enter the **enable** command, you are prompted for the enable password. If you have not set an enable password, just press <Enter>. When you enter the **configure** command you are prompted with the type of configuration. To configure the CacheOS interactively, enter **terminal** or just press <Enter>. The **network** configuration option allows you to configure the CacheOS from a configuration file located on the network.

Configuring Adapters

The built-in Ethernet adapter is configured using the Serial Console. If you have multiple adapters, you must configure each one using the command line interface or Web interface. To configure adapter settings using the command line interface, use the configure interface commands.

For example, to set the IP address for adapter number one using the command line interface, enter the following commands:

```
CacheOS #(config) interface 1<Enter>
CacheOS #(config interface 1) ip-address 192.168.10.19<Enter>
CacheOS #(config interface 1) exit<Enter>
CacheOS #(config)
```

Adding DNS Servers

The primary DNS server is entered using the Serial Console. You can define multiple DNS servers using the command line interface or Web interface. To configure DNS servers using the command line interface, use the configure dns server commands:

```
CacheOS #(config) dns server 192.168.10.65<Enter>
```

Setting the CacheFlow 1000 Name

You can assign a name to the CacheFlow 1000. The name is displayed in the Web interface, and used in the prompt for the command line interface. If you have entered a host name for the CacheFlow 1000 in your DNS server, you should use the same name. To set the name using the command line interface, use the configure hostname commands:

```
CacheOS #(config) hostname CacheFlow Demo<Enter>
CacheOS #(config)
```

Verifying the CacheOS Time

To correctly cache objects, the CacheOS time must be set accurately. The CacheOS uses NTP to set the time, and it is configured with a set of default NTP servers. You should verify the time using the **show clock** command:

```
CacheOS #(config) exit<Enter>
CacheOS # show clock<Enter>
  Tue, 13 Apr 1999 03:53:41 UTC
CacheOS #
```

If the time is not set correctly, you can change the NTP servers using the **ntp** commands in the configure mode. If you do not have access to an NTP server, you can set the time manually using the Web interface. See "Setting the Time" on page 27 for additional information.

Using the Web interface

To access the Web interface, go to the IP address of the CacheFlow 1000 using your Web browser, and specify port 8081. For example, if the IP address configured using the Serial Console was 192.168.10.18, you would enter the following URL in your Web browser:

```
http://192.168.10.18:8081
```

The Web interface is a set of Web pages and Java applets stored on the CacheFlow 1000. The Web interface home page is shown in Figure 2-9. From the home page, you can access the management applets, statistics applets, and documentation.

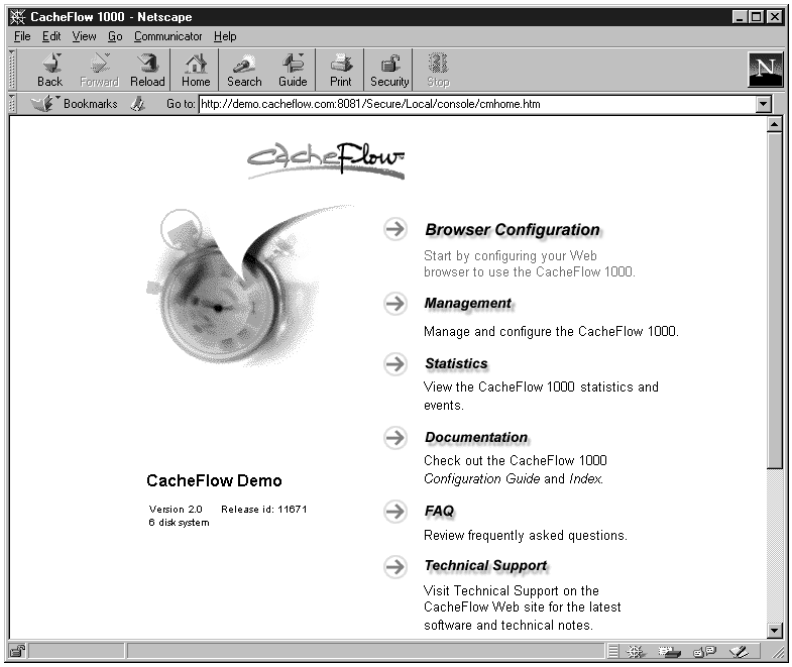

Figure 2-9
Web interface Home Page

From the home page you can access the management and statistics applets.

The Web interface is described in detail in the *CacheOS Management and Configuration Guide*. When first configuring the CacheFlow 1000 you should perform the following tasks:

- configure the adapters
- add DNS servers
- set the CacheFlow 1000 name
- set the time

Configuring Adapters

The built-in Ethernet adapter is configured using the Serial Console. If you have multiple adapters, you must configure each one using the command line interface or Web interface. To configure adapter settings using the Web interface, follow the steps outlined below:

1. Select Management from the CacheFlow 1000 home page.
2. Select the adapter from the adapter drop-down list in the Network applet.
3. Enter the IP address and subnet mask for the adapter.
4. Click the Apply button to save your changes.

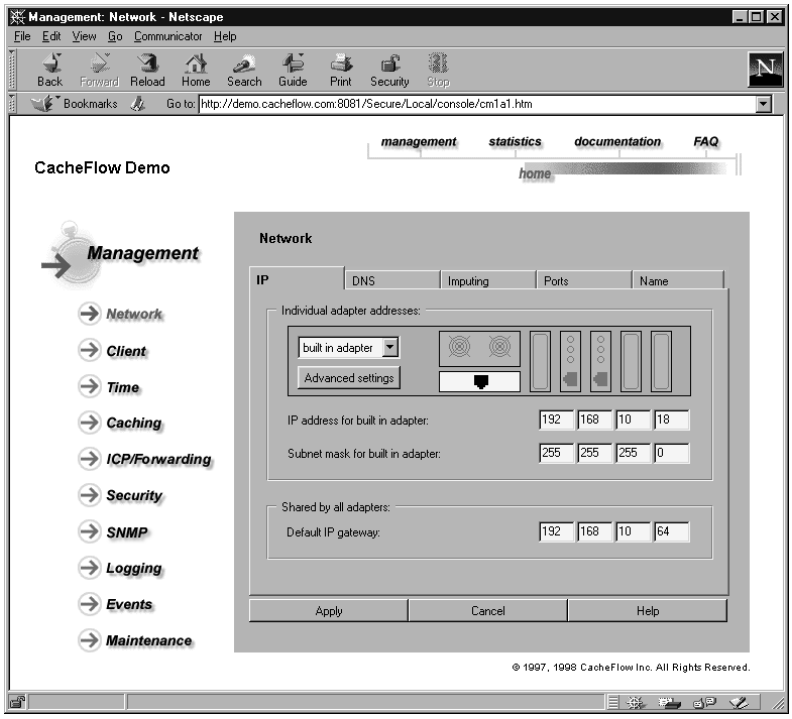

Figure 2-10
Configuring Adapters

Select the adapter to configure from the adapter drop-down list.

Adding DNS Servers

The primary DNS server is entered using the Serial Console. You can define multiple DNS servers using the command line interface or Web interface. To enter additional DNS servers using the Web interface, follow the steps outlined below:

1. Select Management from the CacheOS home page.
2. Select the DNS tab in the Network applet.
3. To enter additional DNS servers click the New button.
4. Type the IP address of the DNS server and click the Ok button.
5. Click the Apply button to save your changes.

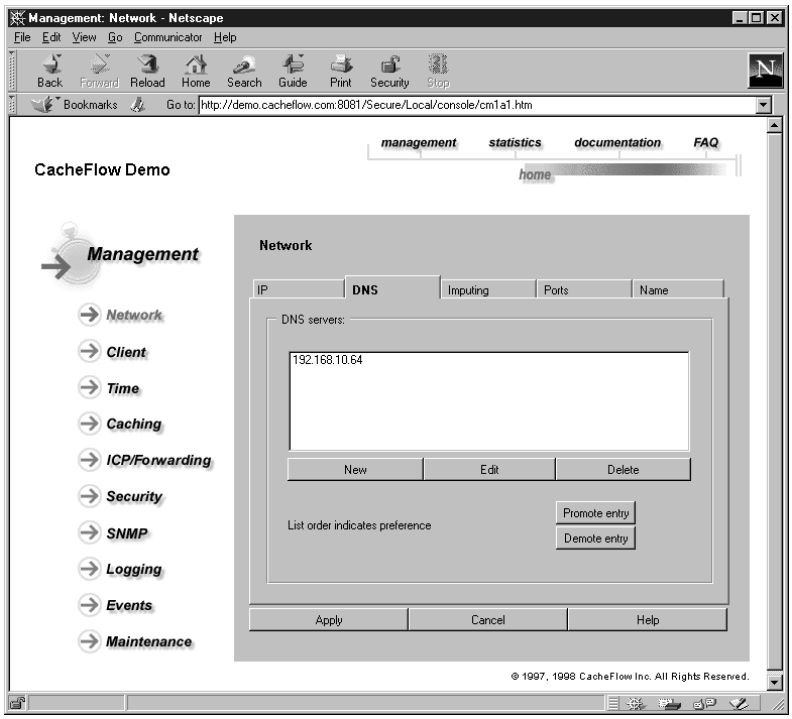

Figure 2-11
Adding DNS Servers

Enter additional DNS servers by clicking the New button.

Setting the CacheFlow 1000 Name

You can assign a name to the CacheFlow 1000. The name is displayed in the Web interface and used for the command line interface prompt. If you have entered a host name for the CacheFlow 1000 in your DNS server, you should use the same name. To set the name using the Web interface, follow the steps outlined below:

1. Select Management from the CacheFlow 1000 home page.
2. Select the Name tab in the Network applet.
3. Enter the name in the name field.
4. Click the Apply button to save your changes.

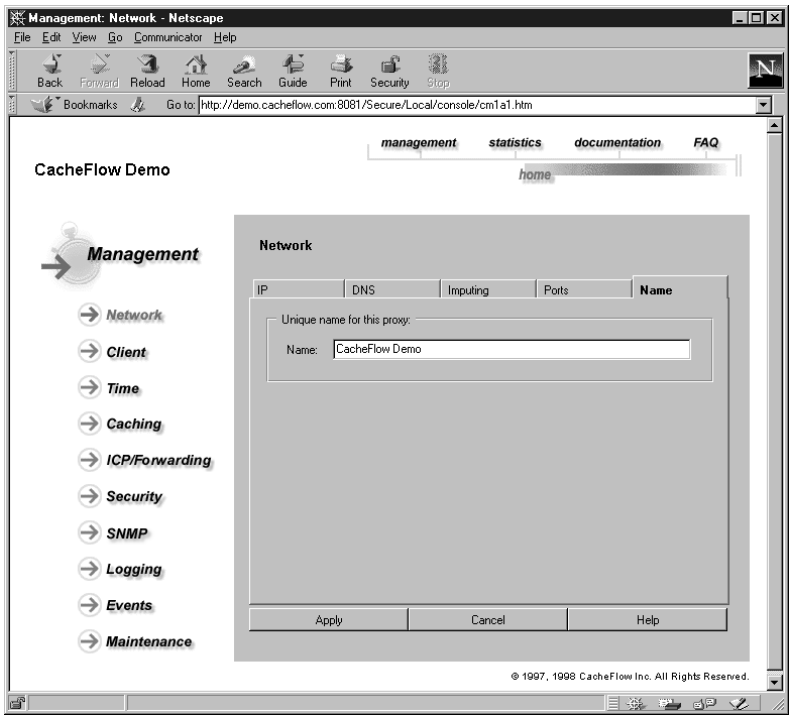

Figure 2-12 Setting the CacheFlow 1000 Name

Type the name in the name field.

Setting the Time

The CacheOS sets UTC time by connecting to an NTP server. The CacheOS includes a list of NTP servers available on the Internet. If an NTP server is not available, you can set the time manually, but you should not disable NTP unless it is not available. To set the time manually using the Web interface, follow the steps outlined below:

1. Select Management from the CacheFlow 1000 home page.
2. Select the Time applet.
3. Clear the Enable NTP checkbox.
4. Click the Pause button.
5. Enter the current UTC time and date in the UTC fields.
6. Click the Resume button.
7. Click the Apply button to save your changes.

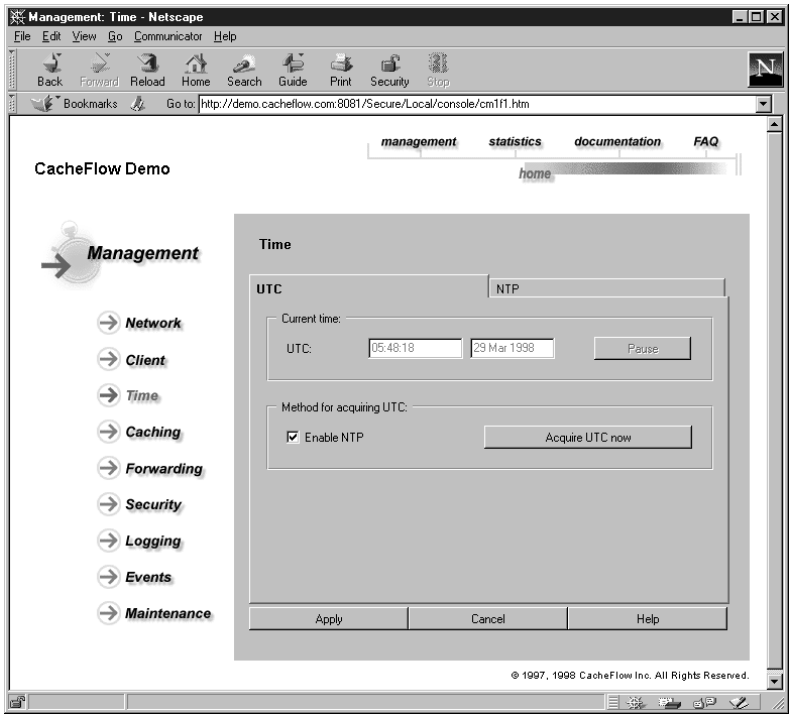

Figure 2-13
Setting the Time

The CacheFlow 1000 retrieves the UTC time from an NTP server if available.

Where to Go From Here

The CacheFlow 1000 is now installed, and will begin caching Web objects. As soon as it is running, you will see disk and network activity as it begins maintaining the cache.

The next step is to configure your routers or load-balancing switches for transparent caching, or to configure the client instructions and notify your users that the CacheFlow 1000 is available. If you do not use transparent caching, each browser must be configured to use the CacheFlow 1000. The client instructions make it easy for your users to modify their configuration. See the *CacheOS Management and Configuration Guide* for information on configuring clients.

Once the CacheOS is configured and running properly, you should secure the device so it can be managed and used only by your authorized users. You can restrict access to the device using the following configuration options:

- You can limit access to the management console to specific IP addresses or subnets. To set console restrictions using the command line interface, see the **security** command in the *CacheOS Management and Configuration Guide.* To set console restrictions using the Web interface, see "Setting Access Restrictions" in the *CacheOS Management and Configuration Guide.*
- You can restrict user access to the CacheOS using the ACL (access control list) options of the filter list. To create an ACL using the command line interface, see the **filter-list** command in the *CacheOS Management and Configuration Guide*. To create an ACL using the Web interface, see "Using a Filter List" in the *CacheOS Management and Configuration Guide*.

There are numerous other management options, settings, and statistics you can review. See the *CacheOS Management and Configuration Guide* for a complete list of basic and advanced configuration procedures using both the command line interface and the Web interface.

Chapter 3

Troubleshooting

This chapter describes how to locate and solve common problems when installing and using the CacheFlow 1000.

Overview

This chapter is divided into installation, management, and client issues. The installation issues describe how to verify the CacheFlow 1000 device is functioning properly, and common problems that may occur when using the Serial Console. The management issues describe problems that may occur when trying to access the Web interface. And the client issues describe problems that may occur at the Web browser when using the CacheFlow 1000 as the proxy server.

Description	Page
CacheFlow 1000 does not power on	30
Power supply LED is off	31
Link LED is off	32
Speed LED is on	32
Disk status LED is off	32
Disk status LED is flashing	33
Cannot access the Serial Console	34
Command line interface session times out	34
Command line interface limited to four sessions	34
Web interface is not accessible	35
Web interface password fails	35
Web interface applets not displayed	35
Web interface Java errors occur	35
Client HTML requests fail	36
Client HTML responses are slow	37

tus LEDs to verify the

ower On

), verify it has started
indicators:

ould light:

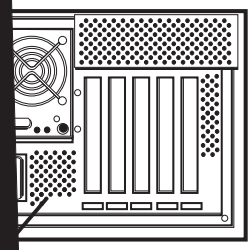

fast flashing status L
Status LEDs that are
or a drive that is not

3. The LEDs for the built-in netw

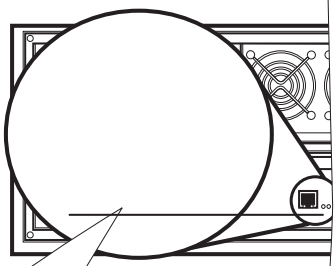

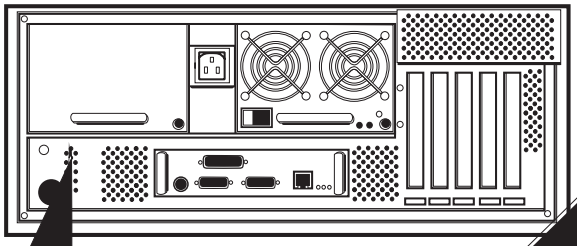

Figure 3-1
Power Supply Tray

Verify the power supply tray is fully seated, and re-tighten the power supply latch.

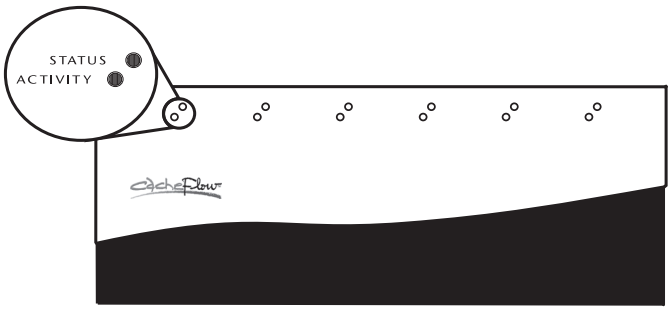

Figure 3-3
Disk Status and Activity LEDs

Verify the disk is locked in place. Open the drive access door and inspect each disk as shown in figure 3-4. To re-seat the disk, go to the Web interface and spin down the disk using the General Statistics applet. Then release the disk lever and slowly pull the drive toward you. To re-seat the disk, hold the disk lever in the open position and push the disk into the CacheFlow 1000. When the disk lever meets the frame, push the lever down slowly until the lever locks the disk in place.

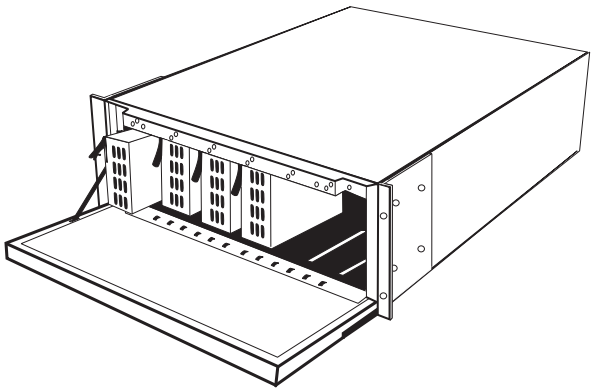

Figure 3-4
Verifying the Disk Drives

Verify the disk drives are fully inserted and locked in place.

Disk Status LED is Flashing

Each disk has a status and activity LED. During system startup all status LEDs will flash slowly. Once the system boot sequence is complete, the status LED should stay on. If a disk status LED flashes quickly (5 times per second) there is a disk error. Try removing and re-seating the drive (as described in "Disk Status LED is OFF" above). If the status LED continues to flash, contact your CacheFlow Customer Service representative.

Cannot Access the Serial Console

When connecting to the Serial Console you must configure the terminal emulator for the correct settings. You can connect to the Serial Console using a terminal, a terminal server, or a computer running a terminal emulator. For detailed instructions on connecting the terminal see page 12.

Testing the CacheFlow 1000

If you suspect a problem with the CacheFlow device, you can test its operation and connection using the command line interface. You can use the **ping** and **traceroute** commands to test the network connection. From enable mode you can use the **test** command to retrieve an object using only the CacheOS, or to run a loopback test to verify the device is operational.

The Command Line Interface

This section helps you identify common problems when using the command line interface.

Command Line Interface Session Times Out

When you have a Telnet session to the command line interface, that session will remain open as long as there is activity. If you leave the session idle, the connection will eventually timeout and you will have to reconnect. The default timeout is 5 minutes. You can set the timeout using the **line-vty** command in configure mode.

Command Line Interface Limited to Four Sessions

The command line interface is limited to four active Telnet sessions (and one Serial Console session). When you try to connect a fifth Telnet session, you will receive a message saying no more sessions are available. To connect you will have to wait for one of the active sessions to close.

The Web interface

This section helps you identify common problems when working with the Web interface.

Web interface is Not Accessible

When you connect to the CacheFlow 1000 from a Web browser, the Web interface should be displayed. If the Web browser fails when attempting to connect to the CacheFlow 1000, follow the steps outlined below to help identify the problem:

1. Verify you have typed the correct IP address and port (the default port is 8081) for the CacheFlow 1000 in the Web browser. The only way you can verify the address the CacheFlow 1000 is using without the Web interface is to connect to the Serial Console and display the network configuration. See page 16 for information on accessing the Serial Console.
2. Verify your workstation is configured and working properly by connecting to other Web sites (such as www.cacheflow.com). If your browser is configured to use the CacheFlow 1000 as the proxy server and there is a problem with the CacheFlow 1000, this test may fail.
3. If you are accessing a CacheFlow 1000 located on a remote network (any segment other than the segment where your workstation is attached), verify other servers on that network are accessible.
4. Try pinging the IP address to verify the CacheFlow 1000 is accessible from the workstation. If the CacheFlow 1000 does not respond to the ping, verify the CacheFlow 1000 is operational as described on page 30.

Web interface Username and Password Fail

The Web interface can be protected with a username and password. If the username and password fail, you can reset them using the Serial Console. See page 16 for information on accessing the Serial Console.

Web interface Applets Not Displayed

The Web interface requires Java and JavaScript. You must use a Web browser that supports Java and JavaScript, and the Web browser must have Java and JavaScript enabled. Netscape 3.0 and later and Internet Explorer 3.0 and later support Java.

Web interface Java Errors Occur

When you upgrade the Web interface you must clear the local cache and restart the browser to guarantee the new Java components for the Web

interface are loaded. Each Web browser handles Java applets in a different way. Some browsers do not reload applets until their cache is cleared, or the browser is restarted.

User Issues

This section helps you identify common problems when the Web client either fails or is slow when retrieving Web objects.

Client HTML Requests Fail

When a request for a Web document fails, it indicates one of the following:

- the Web browser is not properly configured for the CacheFlow 1000
- the CacheFlow 1000 cannot access the requested document
- the CacheFlow 1000 is not properly configured
- the CacheFlow 1000 is not functioning

To try and locate the problem, follow the steps outlined below:

1. If the CacheFlow 1000 is used to access the Internet, and the CacheFlow 1000 has been working properly, the most likely cause of failed requests may be the route between the CacheFlow 1000 and the Internet or intranet. Before you spend time troubleshooting the CacheFlow 1000, verify your connection to the Internet using the ping and traceroute commands from the command line interface. If you are able to ping the destination from the CacheFlow 1000, use the test command to verify the device can get the object. For information on the ping, traceroute, and test commands, see the *CacheOS Management and Configuration Guide*. If the request fails, try other HTML requests to verify all requests fail.
2. The CacheFlow 1000 can be configured to deny access to address groups. If the CacheFlow 1000 is configured for forwarding or filtering, verify the requested address does not match a denied subnet and mask. To configure deny settings in the Web interface, from the home page select Management, then ICP/Forwarding.
3. If your network is not configured for transparency, check the Web browser to see if it is using a PAC file for auto-configuration. If the Web browser is configured to use a PAC

file, verify the address of the PAC file is correct, and the file is accessible. See the *CacheOS Management and Configuration Guide* for additional information. If auto-configuration is not being used, check the Web browser's proxy configuration. If you are not using transparency, the Web browser must be configured for the CacheFlow 1000's IP address and port. See the *CacheOS Management and Configuration Guide* for information on configuring the clients.

4. If the correct IP address and port for the proxy server is specified in the Web browser, try pinging the IP address to verify the CacheFlow 1000 is accessible from the workstation. If the CacheFlow 1000 does not respond to the ping, verify it is operational as described on page 30. Also verify you can ping other nodes on the network. If you can ping the CacheFlow 1000, try pinging the workstation from CacheFlow 1000 command line interface.
5. If the CacheFlow 1000 responds to the ping, verify the CacheFlow 1000's configuration. If it is configured to forward requests, verify the server to which the CacheFlow 1000 is forwarding requests. If the CacheFlow 1000 is not forwarding requests, check the default gateway address and DNS address.
6. If the CacheFlow 1000's default gateway address and DNS address are correct, try pinging each address from the command line interface to verify the servers are running. Be sure to ping the gateway and DNS server from the same network segment where the CacheFlow 1000 is connected.
7. If the default gateway is accessible, the problem most likely lies outside the local network. To verify the problem is not associated with the CacheFlow 1000, you must configure your workstation for the same gateway address as the CacheFlow 1000, and configure the Web browser not to use a proxy server for HTTP requests.

Client HTML Responses are Slow

If every request from the client results in a slow response, there may be a problem accessing a PAC file or the CacheFlow 1000. To identify the problem, follow the steps outlined below:

1. Check the Web browser to see if it is using a PAC file for auto-configuration. If the Web browser is configured to use a PAC file, verify the address of the PAC file is correct, and the file is accessible. See the *CacheOS Management and Configuration*

Guide for additional information on using PAC files. If the PAC file is not accessible, the Web browser may attempt to access the PAC file, then wait for a timeout before retrieving the object directly.

2. Check the Web browser's proxy address and port. The Web browser must be configured for the CacheFlow 1000's IP address and port. See the *CacheOS Management and Configuration Guide* for information on configuring the clients. If the address or port is not correct, the Web browser may attempt to access the CacheFlow 1000, then wait for a timeout before retrieving the object directly.
3. If the correct IP address and port for the proxy server is specified in the Web browser, try pinging the IP address to verify the CacheFlow 1000 is accessible from the workstation. If the CacheFlow 1000 does not respond to the ping, verify it is operational as described on page 30.

Appendix A

Specifications

CacheFlow 1000 Electrical and Environment Specifications

Specifications for the CacheFlow 1000 base model and a fully configured version are shown below:

	Base Model	Fully Configured
Dimensions (L x W x H)	637 x 443 x 178 mm 25 x 17.5 x 7 in	637 x 443 x 178 mm 25 x 17.5 x 7 in
Weight	29.5 kg 59 lb.	39 kg 78 lb.

Index

A

Active Caching, 2

B

baud rate, 12
built-in adapter, 11, 12

C

CacheFlow 1000
  serial port, 12
  weight, 8
CacheFlow Web site, 1
CacheOS, 2
client, 5
  HTML requests fail, 35
  HTML responses slow, 37

D

data bits, 12
default gateway, 16
default gateway address
  setting with the Serial
    Console, 16
dimensions, 39
disk drives, 3
disk status LEDs, 32
DNS, 25
DNS cache, 2
DNS server, 16
  setting with the Serial
    Console, 16
drive LED, 30

E

equipment rack, 8
  L-brackets, 10
  rack mounting adapters, 10
  shelf, 10
  warning, 10
Ethernet adapters, 20, 21, 23
Ethernet cable, 11

F

flow control, 12

H

hardware, 3
hot-swap disk drives, 3
hot-swap power supply, 4
HTML requests fail, 36
HTML responses slow, 37

I

installation, 7
  connecting a terminal, 12
  connecting power, 14
  connecting the network, 11
  mounting in an equipment
    rack, 8
  network settings, 15
IP address, 16, 20, 21, 23
  setting with the Serial
    Console, 16

L

L-bracket, 10
link LED, 32
lithium batteries, 9
locking the system tray, 9

M

Management Console, 5, 22
  accessing, 19
  Java applets, 35
  not accessible, 35
  password, 16
  password fails, 35
Management Console password
  setting with the Serial
    Console, 16

N

name, 21, 26
network adapter LEDs, 31
network adapters, 20, 21, 23
network adapter, 5
network connection, 11
network settings, 15
NTP, 27

O

object prefetching, 2
On/Off switch, 14

P

packing list, 8
parity, 12
power consumption, 39
power cord, 14
power supply, 4, 15
power supply LED, 30
power switch, 15
prefetching, 2

R

rack mounting adapters, 10

S

safety instructions, 8
Serial Console, 5, 15
  accessing, 16
  cannot access, 34
  connecting a terminal, 12
  sample session, 17
serial port, 12
setting the time, 27
shelf, 10
specifications, 39
speed LED, 32
status LEDs, 30
stop bits, 12
subnet mask, 16, 20, 21, 23
  setting with the Serial
    Console, 16
system tray, 4
  key lock, 9
  locking and unlocking, 9

T

terminal, 12
  settings, 12
terminal emulator, 12
terminal server, 12
time, 27
troubleshooting, 29

U

unlocking the system tray, 9
unpacking, 7